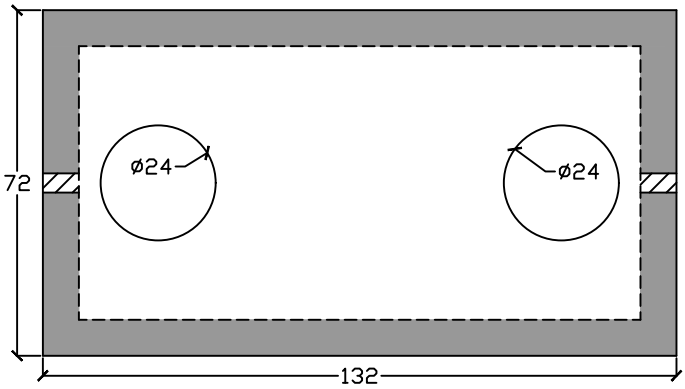

Top View

- ASTM C 1613 compliant
- HS20 traffic rated
- 4" inlet/outlet (standard)
- 6" PVC 90 in baffle wall
- 2/3 - 1/3 compartment capacity

Weights

Top - 17,000 lb.
Bottom - 17,400 lb.

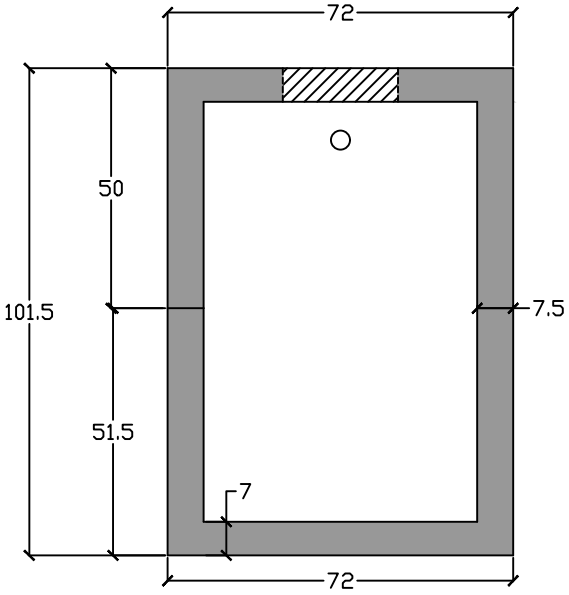

End View

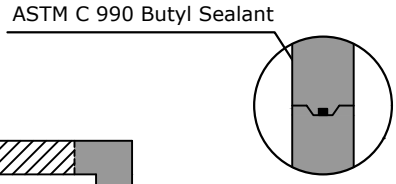

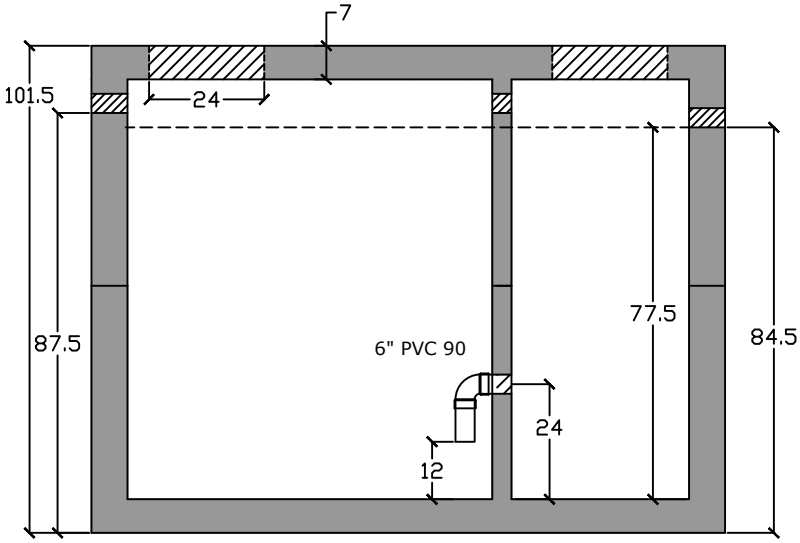

Side View

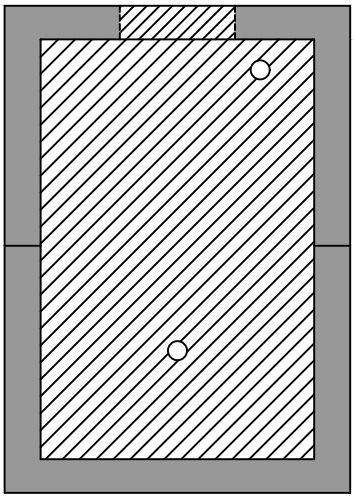

Baffle View

Specifications

Concrete: 5,000 psi minimum strength (28 day)
Reinforcing: Primary reinforcement will be rebar.
Risers: Grade rings and manhole frames and covers sold separately.
Sealant: Sealant used in the seam of the tank will meet or exceed ASTM C990.
Pipe Penetrations: Inlet and outlets are fitted with seals that meet or exceed all ASTM C923 specifications.
Partition Wall: The partition wall, if present, is poured monolithically.
Watertight: ASTM C 1227 latest revision. Tank must be tested within 3 working days of delivery.
Drawing: All measurements are accurate within ± 1 inch.

Tank Warranty: See Terms and Conditions.

Installation: The tank hole is not to be more than 18 in. longer and wider than the tank. There shall be a minimum of 6" of 3/4" stone bedding. This tank is designed for HS20 traffic loads and with a max backfill cover of 8' and a minimum of 6".

BARGER PRECAST

C.R. Barger & Sons, Inc.
P.O. Box 370 - Kingston TN 37763
Phone 888.882.5860 - BargerAndSons.com

Grease Trap HS20 2500 Gallon

Date:	Drawn By:	Approx. Weight:
2.162017	Eric Barger	See above